TECHNICAL SPECIFICATIONS

ARTIK 5

TECHNICAL DATA

ARTIK 5			**22**	**24**	**26**	**28**
CELLS	NUMBER		66	66	66	66
	CLOSED		14	14	14	14
	BOX		31	31	31	31
FLAT	AREA	M²	22,2	24	26,3	28,8
	SPAN	M	11,83	12,30	12,87	13,47
	ASPECT RATIO		6,30	6,30	6,30	6,30
PROJECTED	AREA	M²	18,89	20,43	22,37	24,50
	SPAN	M	9,59	9,98	10,43	10,92
	ASPECT RATIO		4,86	4,86	4,86	4,86
FLATTENING		%	15	15	15	15
CORD	MAXIMUM	M	2,27	2,37	2,48	2,60
	MINIMUM	M	0,62	0,64	0,67	0,70
	AVERAGE	M	1,88	1,95	2,04	2,14
LINES	TOTAL METERS	M	257	267	275	288
	HEIGHT	M	7,20	7,49	7,85	8,21
	NUMBER		268	268	268	268
	MAIN		1+1/2/3	1+1/2/3	1+1/2/3	1+1/2/3
RISERS	NUMBER	3/4	A+A'/B/C	A+A'/B/C	A+A'/B/C	A+A'/B/C
	TRIMS		NO	NO	NO	NO
	ACCELERATOR	M/M	160	160	160	160
TOTAL WEIGHT	MINIMUM	KG	60	75	90	105
IN FLIGHT	MAXIMUM	KG	80	95	110	125
GLIDER WEIGHT		KG	4,3	4,7	5	5,3
CERTIFICATION		EN/LTF	C	C	C	C

MATERIALS TECHNICAL DATA

CANOPY	FABRIC CODE	SUPPLIER
UPPER SURFACE	9017 E25	PORCHER IND (FRANCE)
BOTTOM SURFACE	70032 E3W	PORCHER IND (FRANCE)
RIBS	9017 E29/70032 E4D	PORCHER IND (FRANCE)
DIAGONALS	9017 E29/70032 E4D	PORCHER IND (FRANCE)
LOOPS	LKI - 10	KOLON IND. (KOREA)
REINFORCEMENT LOOPS	RIPSTOP FABRIC	PORCHER IND (FRANCE)
TRAILING EDGE REIFORCEMENT	MYLAR	D-P (GERMANY)
REINFORCEMENT RIBS	LTN-0.8 STICK	SPORTWARE CO. (CHINA)
THREAD	SERAFIL 60	AMAN (GERMANY)

SUSPENSION LINES	FABRIC CODE	SUPPLIER
UPPER CASCADES	DC - 40	LIROS GMHB (GERMANY)
UPPER CASCADES	DC - 60	LIROS GMHB (GERMANY)
MIDDLE CASCADES	DC - 40	LIROS GMHB (GERMANY)
MIDDLE CASCADES	DC - 60	LIROS GMHB (GERMANY)
MIDDLE CASCADES	8000/U-70	EDELRID (GERMANY)
MIDDLE CASCADES	8000/U-90	EDELRID (GERMANY)
MIDDLE CASCADES	8000/U-130	EDELRID (GERMANY)
MAIN	8000/U-130	EDELRID (GERMANY)
MAIN	8000/U-190	EDELRID (GERMANY)
MAIN	8000/U-230	EDELRID (GERMANY)
MAIN BREAK	TNL-280	TEIJIM LIMITED (JAPAN)
THREAD	SERAFIL 60	AMAN (GERMANY)

RISERS	FABRIC CODE	SUPPLIER
MATERIAL	3455	COUSIN (FRANCE)
COLOR INDICATOR	PAD	TECNI SANGLES (FRANCE)
THREAD	V138	COATS (ENGLAND)
MAILLONS	3.5	ANSUNG PRECISION (KOREA)
PULLEYS	RF25109	RONSTAN (AUSTRALIA)

SUSPENSION PLAN

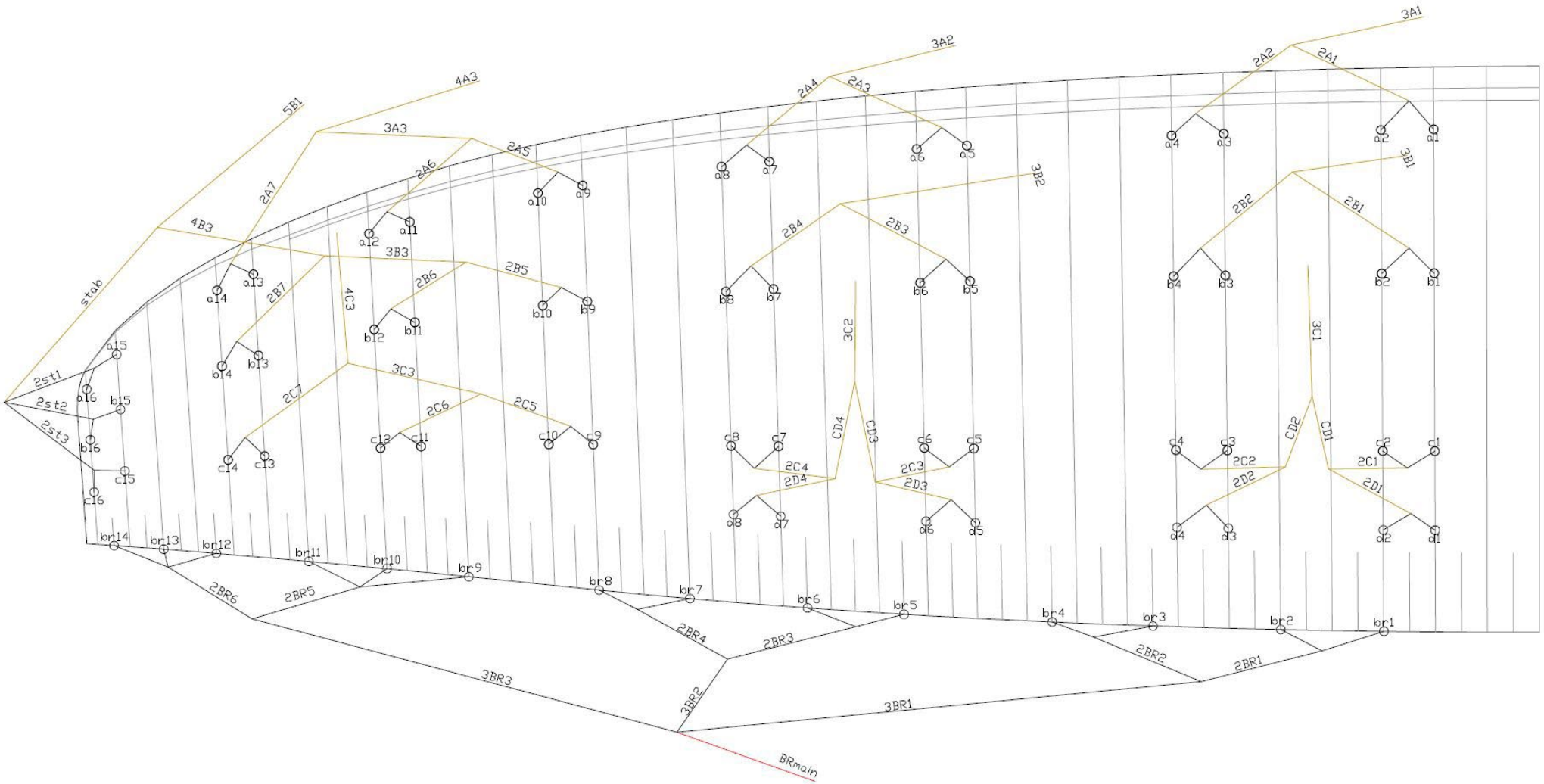

RISERS PLAN

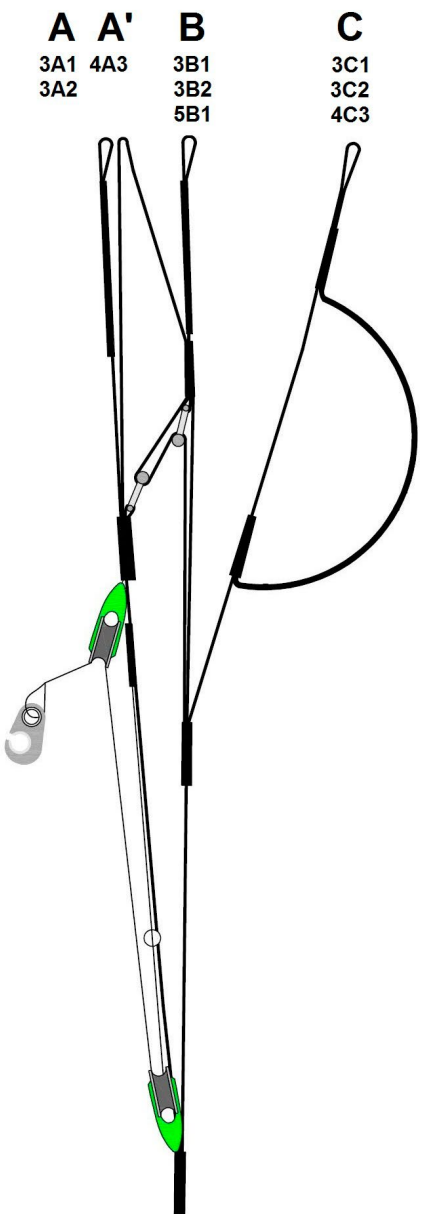

COLORS TECHNICAL DATA

CHERIMOYA	SB1	LIMA	MAIN TOP	REF: 500
	SB2	LIMA	MAIN BOTTOM	REF: 500
	SB3	BLACK	HORN	REF: 102
	SB4	WHITE	PRINCIPAL SHADOW	REF: 001
	SB5	ROYAL BLUE	VOLUME SHADOW	REF: 317

GOLDEN	SB1	GOLD	MAIN TOP	REF: 939
	SB2	GOLD	MAIN BOTTOM	REF: 939
	SB3	ROYAL BLUE	HORN	REF: 317
	SB4	BLACK	PRINCIPAL SHADOW	REF: 102
	SB5	WHITE	VOLUME SHADOW	REF: 001

HARDOS	SB1	ORANGE	MAIN TOP	REF: 744
	SB2	ORANGE	MAIN BOTTOM	REF: 744
	SB3	BLACK	HORN	REF: 102
	SB4	WHITE	PRINCIPAL SHADOW	REF: 001
	SB5	DRAGON RED	VOLUME SHADOW	REF: 636

SNOWFLAKE	SB1	ROYAL BLUE	MAIN TOP	REF: 317
	SB2	ROYAL BLUE	MAIN BOTTOM	REF: 317
	SB3	WHITE	HORN	REF: 001
	SB4	LIMA	PRINCIPAL SHADOW	REF: 500
	SB5	BLACK	VOLUME SHADOW	REF: 102

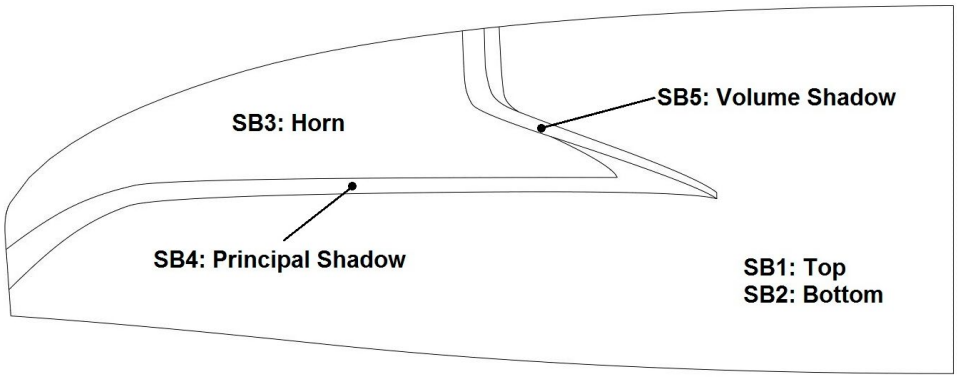

WING LOAD TECHNICAL DATA

ARTIK 5

22			24		
P.T.V.		**KG/M2**	**P.T.V.**		**KG/M2**
60	=	2,70	75	=	3,13
61	=	2,75	76	=	3,17
62	=	2,79	77	=	3,21
63	=	2,84	78	=	3,25
64	=	2,88	79	=	3,29
65	=	2,93	80	=	3,33
66	=	2,97	81	=	3,38
67	=	3,02	82	=	3,42
68	=	3,06	83	=	3,46
69	=	3,11	84	=	3,50
70	=	3,15	85	=	3,54
71	=	3,20	86	=	3,58
72	=	3,24	87	=	3,63
73	=	3,29	88	=	3,67
74	=	3,33	89	=	3,71
75	**=**	**3,38**	90	=	3,75
76	=	3,42	91	=	3,79
77	=	3,47	92	=	3,83
78	=	3,51	93	=	3,88
79	=	3,56	94	=	3,92
80	=	3,60	95	=	3,96

LINES TECHNICAL DATA

ARTIK 5 **22**

REF.	MAT.	KG	COLOR	m/m	REF.	MAT.	KG	COLOR	m/m	REF.	MAT.	KG	COLOR	m/m	REF.	MAT.	KG	COLOR	m/m	REF.	MAT.	KG	COLOR	m/m
A					B					C					D					BRAKE				
A1	DC	60	WHT	287	B1	DC	60	WHT	284	C1	DC	40	WHT	285	D1	DC	40	WHT	285	BR1	DC	40	WHT	644
A2	DC	60	WHT	251	B2	DC	60	WHT	247	C2	DC	40	WHT	245	D2	DC	40	WHT	248	BR2	DC	40	WHT	385
A3	DC	60	WHT	264	B3	DC	60	WHT	261	C3	DC	40	WHT	258	D3	DC	40	WHT	261	BR3	DC	40	WHT	612
A4	DC	60	WHT	273	B4	DC	60	WHT	270	C4	DC	40	WHT	273	D4	DC	40	WHT	273	BR4	DC	40	WHT	585
A5	DC	60	WHT	273	B5	DC	60	WHT	269	C5	DC	40	WHT	271	D5	DC	40	WHT	273	BR5	DC	40	WHT	607
A6	DC	60	WHT	236	B6	DC	60	WHT	233	C6	DC	40	WHT	231	D6	DC	40	WHT	232	BR6	DC	40	WHT	471
A7	DC	60	WHT	242	B7	DC	60	WHT	238	C7	DC	40	WHT	238	D7	DC	40	WHT	248	BR7	DC	40	WHT	527
A8	DC	60	WHT	253	B8	DC	60	WHT	250	C8	DC	40	WHT	251	D8	DC	40	WHT	244	BR8	DC	40	WHT	545
A9	DC	40	WHT	278	B9	DC	40	WHT	274	C9	DC	40	WHT	274						BR9	DC	40	WHT	988
A10	DC	40	WHT	215	B10	DC	40	WHT	210	C10	DC	40	WHT	207						BR10	DC	40	WHT	892
A11	DC	40	WHT	268	B11	DC	40	WHT	259	C11	DC	40	WHT	255						BR11	DC	40	WHT	878
A12	DC	40	WHT	256	B12	DC	40	WHT	247	C12	DC	40	WHT	248						BR12	DC	40	WHT	567
A13	DC	40	WHT	268	B13	DC	40	WHT	249	C13	DC	40	WHT	245						BR13	DC	40	WHT	593
A14	DC	40	WHT	253	B14	DC	40	wht	247	C14	DC	40	WHT	239						br14	DC	40	wht	654
A15	DC	40	WHT	361	B15	DC	40	wht	325	C15	DC	40	WHT	277										
A16	DC	40	WHT	350	B16	DC	40	wht	338	C16	DC	40	WHT	298										
2A1	8000/U	130	NATURE	1796	2B1	8000/U	130	NATURE	1779	2C1	8000/U	70	NATURE	914	2D1	8000/U	70	NATURE	985	2BR1	DC	40	WHT	1093
2A2	8000/U	130	NATURE	1743	2B2	8000/U	130	NATURE	1724	2C2	8000/U	70	NATURE	894	2D2	8000/U	70	NATURE	963	2BR2	DC	40	WHT	674
2A3	8000/U	130	NATURE	1658	2B3	8000/U	130	NATURE	1635	2C3	8000/U	70	NATURE	854	2D3	8000/U	70	NATURE	919	2BR3	DC	40	WHT	981
2A4	8000/U	90	NATURE	1593	2B4	8000/U	90	NATURE	1573	2C4	8000/U	70	NATURE	797	2D4	8000/U	70	NATURE	853	2BR4	DC	40	WHT	842
2A5	8000/U	70	NATURE	1442	2B5	8000/U	70	NATURE	1406	2C5	8000/U	70	NATURE	1284						2BR5	DC	40	WHT	541
2A6	8000/U	70	NATURE	1272	2B6	8000/U	70	NATURE	1242	2C6	8000/U	70	NATURE	1123						2BR6	DC	40	WHT	847
2A7	8000/U	70	NATURE	2096	2B7	8000/U	70	NATURE	1986	2C7	8000/U	70	NATURE	1841										
3A3	8000/U	130	NATURE	923	3B3	8000/U	90	NATURE	840	3C3	8000/U	90	NATURE	796										
					4B3	8000/U	90	Nature	1807															
					2ST1	DC	40	WHT	1073	CD1	8000/U	130	NATURE	690						3BR1	DC	60	WHT	3032
					2ST2	DC	40	WHT	1095	CD2	8000/U	130	NATURE	659						3BR2	DC	60	WHT	2531
					2ST3	DC	40	WHT	1199	CD3	8000/U	130	NATURE	652						3BR3	DC	60	wht	2294
					STAB	8000/U	90	NATURE	2473	CD4	8000/U	90	NATURE	640										
																				BRmain	TNL	280	Red	2969
																							Point:	2769
3A1	8000/U	230	NATURE	4602	3B1	8000/U	190	NATURE	4566	3C1	8000/U	190	NATURE	4821										
3A2	8000/U	190	NATURE	4613	3B2	8000/U	130	NATURE	4583	3C2	8000/U	130	NATURE	4801										
4A3	8000/U	130	NATURE	3747	5B1	8000/U	130	NATURE	2031	4C3	8000/U	130	NATURE	4069										

LINES TECHNICAL DATA

ARTIK 5 **24**

REF.	MAT.	KG	COLOR	m/m	REF.	MAT.	KG	COLOR	m/m	REF.	MAT.	KG	COLOR	m/m	REF.	MAT.	KG	COLOR	m/m	REF.	MAT.	KG	COLOR	m/m
A					B					C					D					BRAKE				
A1	DC	60	WHT	298	B1	DC	60	WHT	295	C1	DC	40	WHT	296	D1	DC	40	WHT	297	BR1	DC	40	WHT	670
A2	DC	60	WHT	261	B2	DC	60	WHT	258	C2	DC	40	WHT	255	D2	DC	40	WHT	258	BR2	DC	40	WHT	401
A3	DC	60	WHT	274	B3	DC	60	WHT	271	C3	DC	40	WHT	268	D3	DC	40	WHT	271	BR3	DC	40	WHT	636
A4	DC	60	WHT	284	B4	DC	60	WHT	281	C4	DC	40	WHT	284	D4	DC	40	WHT	284	BR4	DC	40	WHT	609
A5	DC	60	WHT	284	B5	DC	60	WHT	280	C5	DC	40	WHT	282	D5	DC	40	WHT	283	BR5	DC	40	WHT	631
A6	DC	60	WHT	246	B6	DC	60	WHT	243	C6	DC	40	WHT	240	D6	DC	40	WHT	241	BR6	DC	40	WHT	490
A7	DC	60	WHT	251	B7	DC	60	WHT	247	C7	DC	40	WHT	247	D7	DC	40	WHT	258	BR7	DC	40	WHT	547
A8	DC	60	WHT	263	B8	DC	60	WHT	260	C8	DC	40	WHT	261	D8	DC	40	WHT	254	BR8	DC	40	WHT	567
A9	DC	40	WHT	289	B9	DC	40	WHT	284	C9	DC	40	WHT	285						BR9	DC	40	WHT	1027
A10	DC	40	WHT	223	B10	DC	40	WHT	218	C10	DC	40	WHT	216						BR10	DC	40	WHT	927
A11	DC	40	WHT	278	B11	DC	40	WHT	269	C11	DC	40	WHT	265						BR11	DC	40	WHT	913
A12	DC	40	WHT	266	B12	DC	40	WHT	257	C12	DC	40	WHT	258						BR12	DC	40	WHT	589
A13	DC	40	WHT	278	B13	DC	40	WHT	259	C13	DC	40	WHT	254						BR13	DC	40	WHT	617
A14	DC	40	WHT	263	B14	DC	40	WHT	256	C14	DC	40	WHT	249						BR14	DC	40	WHT	680
A15	DC	40	WHT	375	B15	DC	40	WHT	338	C15	DC	40	WHT	288										
A16	DC	40	WHT	364	B16	DC	40	WHT	351	C16	DC	40	WHT	310										
2A1	8000/U	130	NATURE	1867	2B1	8000/U	130	NATURE	1849	2C1	8000/U	70	NATURE	950	2D1	8000/U	70	NATURE	1024	2BR1	DC	40	WHT	1136
2A2	8000/U	130	NATURE	1813	2B2	8000/U	130	NATURE	1794	2C2	8000/U	70	NATURE	929	2D2	8000/U	70	NATURE	1001	2BR2	DC	40	WHT	701
2A3	8000/U	130	NATURE	1724	2B3	8000/U	130	NATURE	1700	2C3	8000/U	70	NATURE	888	2D3	8000/U	70	NATURE	956	2BR3	DC	40	WHT	1019
2A4	8000/U	90	NATURE	1658	2B4	8000/U	90	NATURE	1636	2C4	8000/U	70	NATURE	828	2D4	8000/U	70	NATURE	886	2BR4	DC	40	WHT	877
2A5	8000/U	70	NATURE	1499	2B5	8000/U	70	NATURE	1462	2C5	8000/U	70	NATURE	1335						2BR5	DC	40	WHT	562
2A6	8000/U	70	NATURE	1323	2B6	8000/U	70	NATURE	1292	2C6	8000/U	70	NATURE	1167						2BR6	DC	40	WHT	881
2A7	8000/U	70	NATURE	2180	2B7	8000/U	70	NATURE	2065	2C7	8000/U	70	NATURE	1915										
3A3	8000/U	130	NATURE	960	3B3	8000/U	90	NATURE	873	3C3	8000/U	90	NATURE	828										
					4B3	8000/U	90	NATURE	1879															
					2ST1	DC	40	WHT	1116	CD1	8000/U	130	NATURE	716						3BR1	DC	60	WHT	3150
					2ST2	DC	40	WHT	1138	CD2	8000/U	130	NATURE	686						3BR2	DC	60	WHT	2632
					2ST3	DC	40	WHT	1246	CD3	8000/U	130	NATURE	677						3BR3	DC	60	WHT	2389
					STAB	8000/U	90	NATURE	2572	CD4	8000/U	90	NATURE	666										
																				BRMAIN	TNL	280	RED	3098
																							POINT:	2898
3A1	8000/U	230	NATURE	4805	3B1	8000/U	190	NATURE	4768	3C1	8000/U	190	NATURE	5033										
3A2	8000/U	190	NATURE	4820	3B2	8000/U	130	NATURE	4788	3C2	8000/U	130	NATURE	5015										
4A3	8000/U	130	NATURE	3921	5B1	8000/U	130	NATURE	2137	4C3	8000/U	130	NATURE	4255										

NIVIUK ARTIK 5 22

LINES HEIGHT + RISER m/m

	A	B	C	D	br
1	7.174	7.100	7.174	7.245	7.506
2	7.140	7.062	7.134	7.205	7.248
3	7.101	7.019	7.097	7.167	7.062
4	7.108	7.029	7.111	7.177	7.033
5	7.032	6.954	7.036	7.104	6.863
6	6.994	6.920	6.999	7.063	6.729
7	6.937	6.867	6.942	7.004	6.647
8	6.947	6.878	6.958	7.016	6.666
9	6.873	6.838	6.880		6.577
10	6.812	6.778	6.819		6.484
11	6.694	6.661	6.712		6.471
12	6.682	6.648	6.709		6.460
13	6.598	6.558	6.653		6.487
14	6.584	6.554	6.652		6.532
15	6.420	6.406	6.459		
16	6.410	6.422	6.480		

RISERS LENGHT m/m

	A	A'	B	C	
	470	470	470	470	STANDARD
	310	336	363	470	ACCELERATED
	160	134	107	0	TRAVEL

NIVIUK ARTIK 5 24

LINES HEIGHT + RISER m/m

	A	B	C	D	br
1	7.462	7.387	7.467	7.538	7.867
2	7.425	7.350	7.427	7.499	7.598
3	7.385	7.309	7.381	7.457	7.406
4	7.395	7.318	7.398	7.465	7.384
5	7.318	7.245	7.328	7.397	7.214
6	7.280	7.208	7.286	7.357	7.075
7	7.217	7.158	7.225	7.291	6.993
8	7.233	7.162	7.243	7.301	7.010
9	7.161	7.122	7.168		6.911
10	7.097	7.056	7.105		6.812
11	6.972	6.935	6.998		6.795
12	6.960	6.922	6.995		6.790
13	6.870	6.828	6.929		6.823
14	6.854	6.828	6.928		6.881
15	6.680	6.665	6.726		
16	6.669	6.681	6.750		

RISERS LENGHT m/m

	A	A'	B	C	
	470	470	470	470	STANDARD
	310	336	363	470	ACCELERATED
	160	134	107	0	TRAVEL

SUSPENSION TECHNICAL DATA

ARTIK 5

MATERIAL CODE		DC	DC	DC	A-8000/U	8000/U	A-8000/U	A-8000/U	A-8000/U	TNL
STRENGTH CODE		040	060	100	070	90	130	190	230	280
DIAMETER m/m	Ø	0,5	0,6	0,8	0,7	0,8	0,9	1,1	1,1 X 1,4	1,8
CORE MATERIAL		DYNEEMA	DYNEEMA	DYNEEMA	ARAMID	ARAMID	ARAMID	ARAMID	ARAMID	TECHNORA
SLEEVE MATERIAL		NO	NO	NO	NO	NO	NO	NO	NO	POLYESTER
WEIGHT G/M	TOTAL	0,19	0,24	0,42	0,4	0,5	0,8	1,1	1,4	2,7
BREAKING STRENGTH	MINIMUM	40	60	100	70	90	130	190	230	280
	MAXIMUM	48	84	110	78	110	144	211	255	320
STRENGTH AFTER										
5.000 BENDING	TEST EN	33	74	99	39	49	88	52	69	134,7
CYCLES										
ELONGATION AT	5 DAN EN %				0,5	0,4	0,4	0,4	0,3	0,2
	10 DAN EN %		0,43	0,36	0,7	0,6	0,6	0,6	0,5	0,3
	15 DAN EN %				1	0,8	0,8	0,7	0,6	0,4
	20 DAN EN %				1,3	1	0,9	0,9	0,7	0,4
	25 DAN EN %				1,5	1,3	1	1	0,8	0,5
	30 DAN EN %		1,2	1	2,8	2,3	1,8	1,6	1,3	0,9
	75 DAN EN %				3,7	3,2	3,1	2,7	2,3	1,3
	100 DAN EN %							2,6	3,6	1,7
	125 DAN EN %							3,5	3,3	2
	150 DAN EN %							4,3	3,6	2,3
	175 DAN EN %									2,7
	200 DAN EN %									2,8
	250 DAN EN %									
ELONGATION MAX. BREAKING STRENGTH %			3,2	3,4	3,9	4,3	4	4,4	4,4	4,1

MAILLON TECHNICAL DATA

DESCRIPTION

	MAILLON	DELTA
	CODE	3.5
	MATERIAL	STAINLESS STEEL
	SIZE	3 m/m
	WEIGHT	5 G/PIECE
	QUANTITY	8 PIECES
	INSERTS	2 GREEN / 6 BLACK

TECHNICAL SPECIFICATIONS

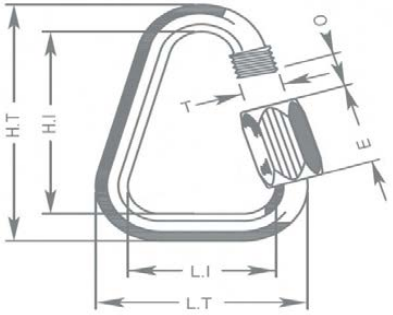

DIMENSIONS	m/m
L.T.	22
L.I.	14
H.T.	37
H.I.	29
O	5
E	12
T	4
LOAD	KG
WORKING LIMIT	110
BREAKING	550

MATERIAL	
AISI 304 STAINLESS STEEL	STANDARD

CLOSING APPLIED BY MANUAL & ENTIRE SCREWING OF THE NUT

TO GUARANTEE THE HIGHEST SAFETY (NO THREAD SHOULD BE OBVIOUS)

SYSTEMATIC CONTROL OF MAILLON QUICK-LINKS BEFORE EVERY FLIGHT

PULLEY TECHNICAL DATA

DESCRIPTION

	PULLEY	20 m/m
	CODE	ID018041
	MATERIAL	STAINLESS STEEL
		NYLON
		CARBON ACETAL
	BEARING	DELRIN®
	WEIGHT	14 G/PIECE

TECHNICAL SPECIFICATIONS

	DIMENSIONS	m/m
	L.T.	M/M
	H.T.	20
	Ø	33
	LOAD	5 MAX
	WORKING LIMIT	KG
	BREAKING	200
		400

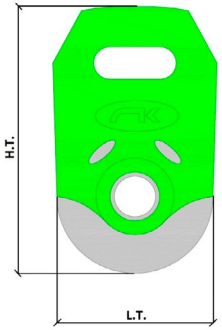

THREAD TECHNICAL DATA

SAIL MAKING	
NAME	SERAFIL
N° OF REFERENCE	60
MATERIAL	POLYESTER
TYPE OF FINISH	SILK
LINEAR DENSITY	NM 61 / 3 (DTEX 163 * 3)
BREAKING STRENGTH	3,000 CN
ELONGATION	17,00%
SERAFIL PROPERTIES	
SOLIDITY ARTIFICIAL LIGTH	ISO 105 B02 > 5 - 6
SOLIDITY SWEAT	ISO 105 E04 > 4
SOLIDITY WASHING	ISO 105 C04 > 3
SOLIDITY GRAZE IN DRY	ISO 105 X12 > 4
SOLIDITY WASHING IN DRY	ISO 105 D01 > 3 - 4
TREATMENT WATER REPELLENT	WR
RISERS MAKING	
NAME	COATS BONDED C.F.P.
N° OF REFERENCE	V138
MATERIAL	POLYESTER
TYPE OF FINISH	SILK
BREAKING STRENGTH	9,5 KG
ELONGATION	19%

RISERS TECHNICAL DATA

RISERS	
N° OF REFERENCE	3455
MATERIAL	POLYESTER & TECHNORA
WIDTH	12 M/M
THICKNESS	0,9 M/M
BREAKING STRENGTH	1.078 DAN
ELONGATION	MAX. 11%
WEIGTH	9,1 G* L.M.
COLOR	BLACK
COLOR INDICATOR	
N° OF REFERENCE	IC-G 1-2
MATERIAL	POLYESTER
WIDTH	70 M/M
THICKNESS	0,80 M/M
BREAKING STRENGTH	130 DN
ELONGATION	35 %
WEIGTH	32 G * L.M.
COLOR	GREEN
LOOPS	
N° OF REFERENCE	LKI - 10
MATERIAL	NYLON
WIDTH	10 M/M
BREAKING STRENGTH	84 KG
ELONGATION	30 %
WEIGTH	5,5 G/M
COLOR	WHITE

NIVIUK